Radiator and Condenser Fan Controls

Component Location Index

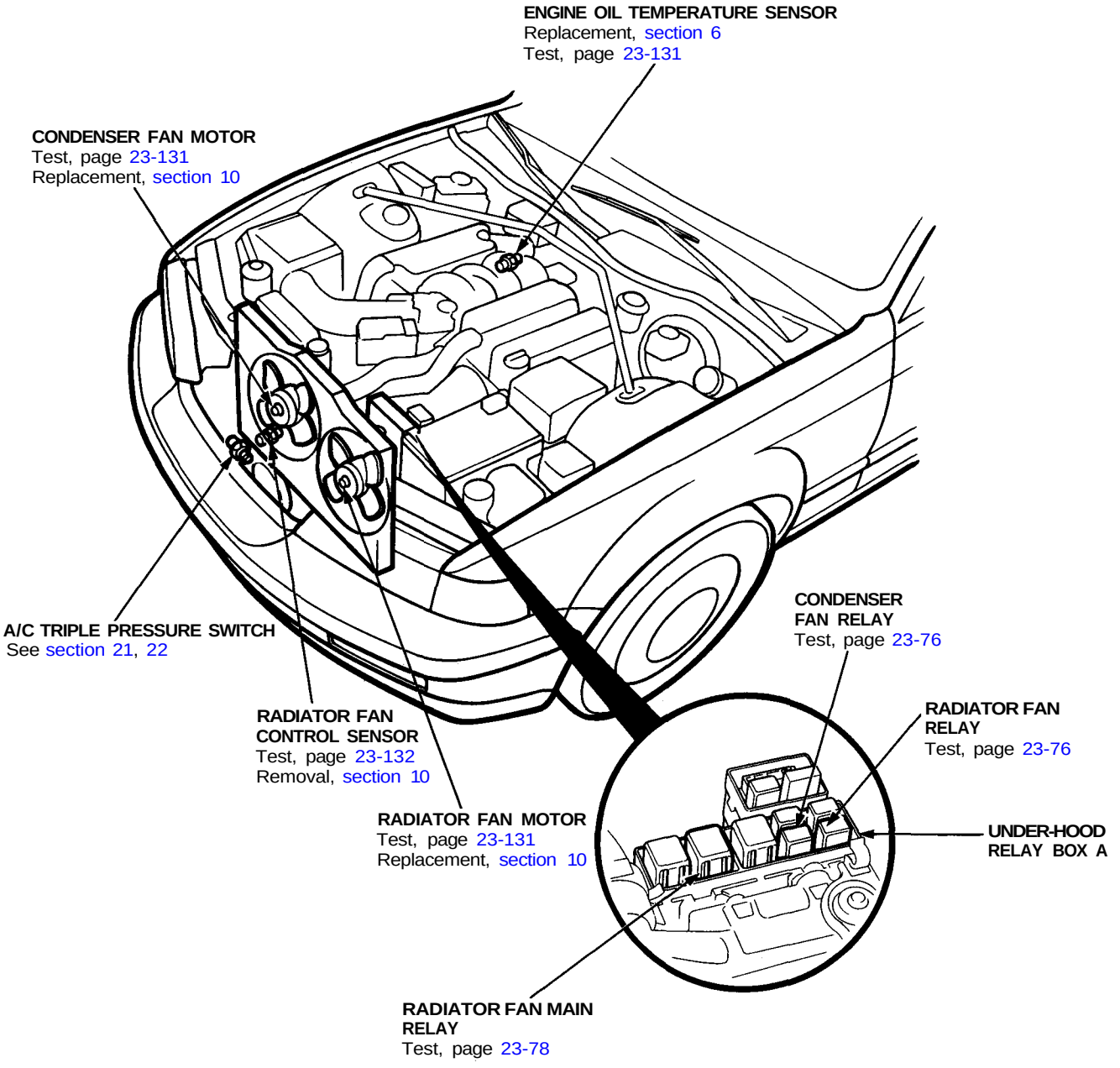

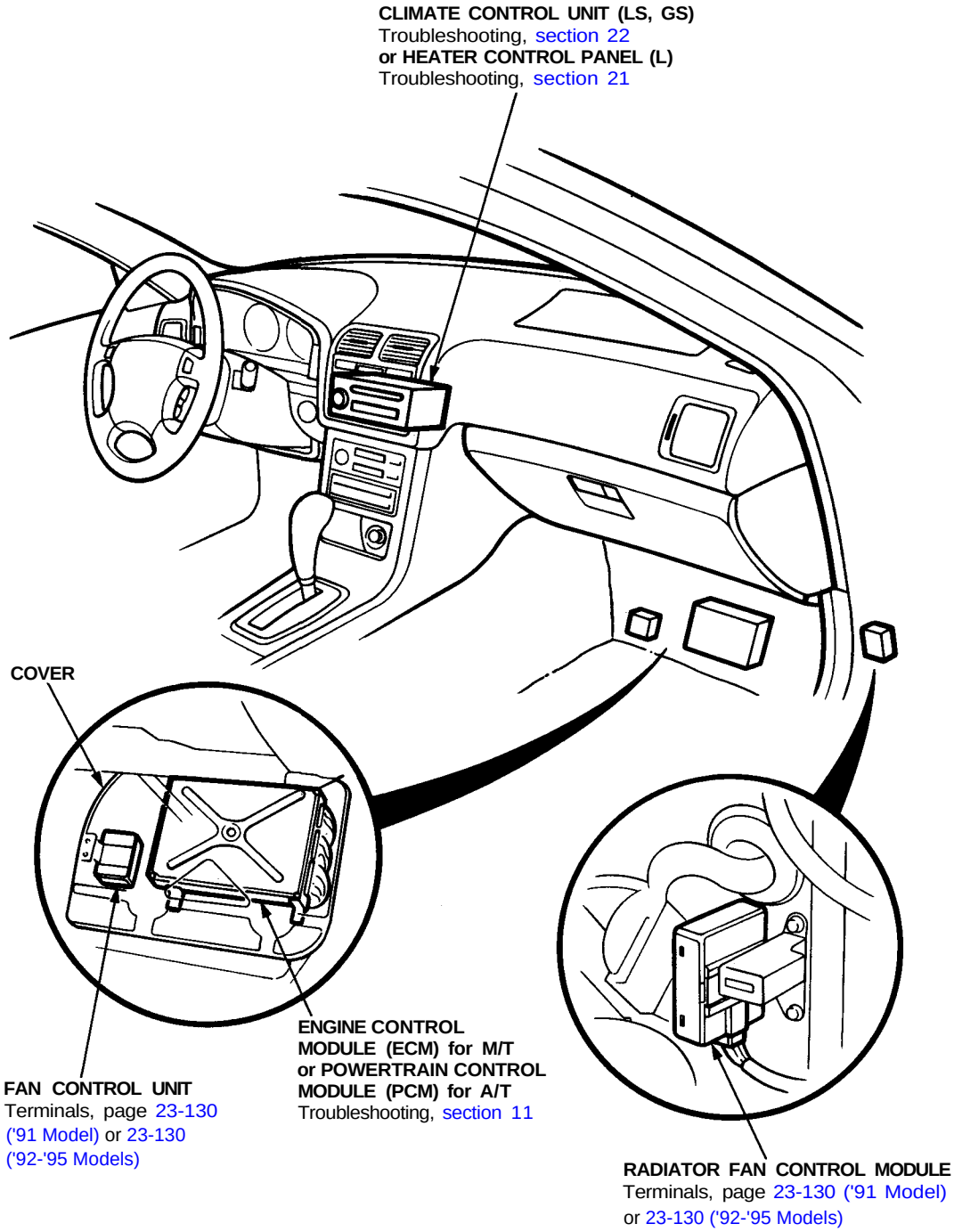
CLIMATE CONTROL UNIT (LS, GS)
Troubleshooting, section 22
or HEATER CONTROL PANEL (L)
Troubleshooting, section 21
COVER
FAN CONTROL UNIT
Terminals, page 23-130 ('91 Model) or 23-130 ('92-'95 Models)
ENGINE CONTROL MODULE (ECM) for M/T or POWERTRAIN CONTROL MODULE (PCM) for A/T
Troubleshooting, section 11
RADIATOR FAN CONTROL MODULE
Terminals, page 23-130 ('91 Model) or 23-130 ('92-'95 Models)